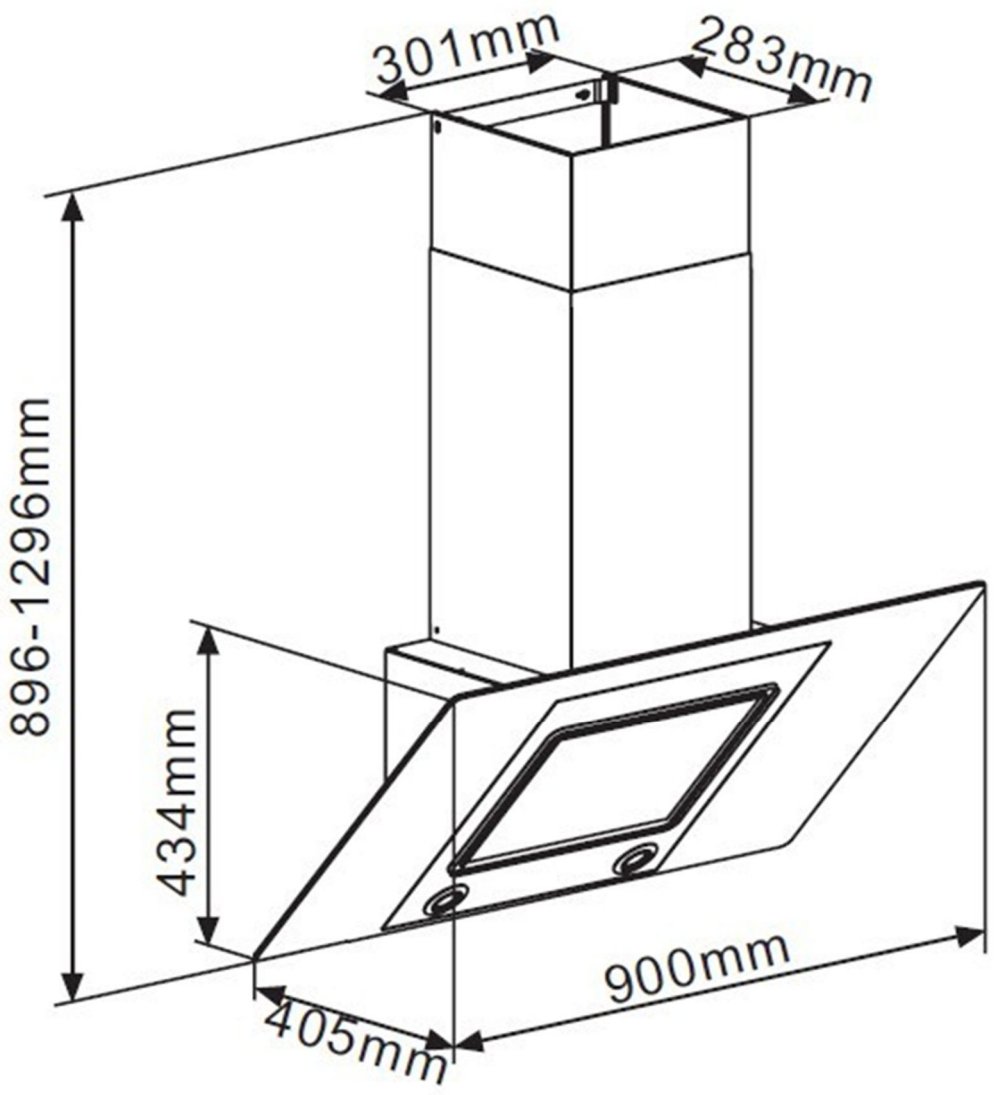
301mm
283mm
896-1296mm
434mm
900mm
405mm